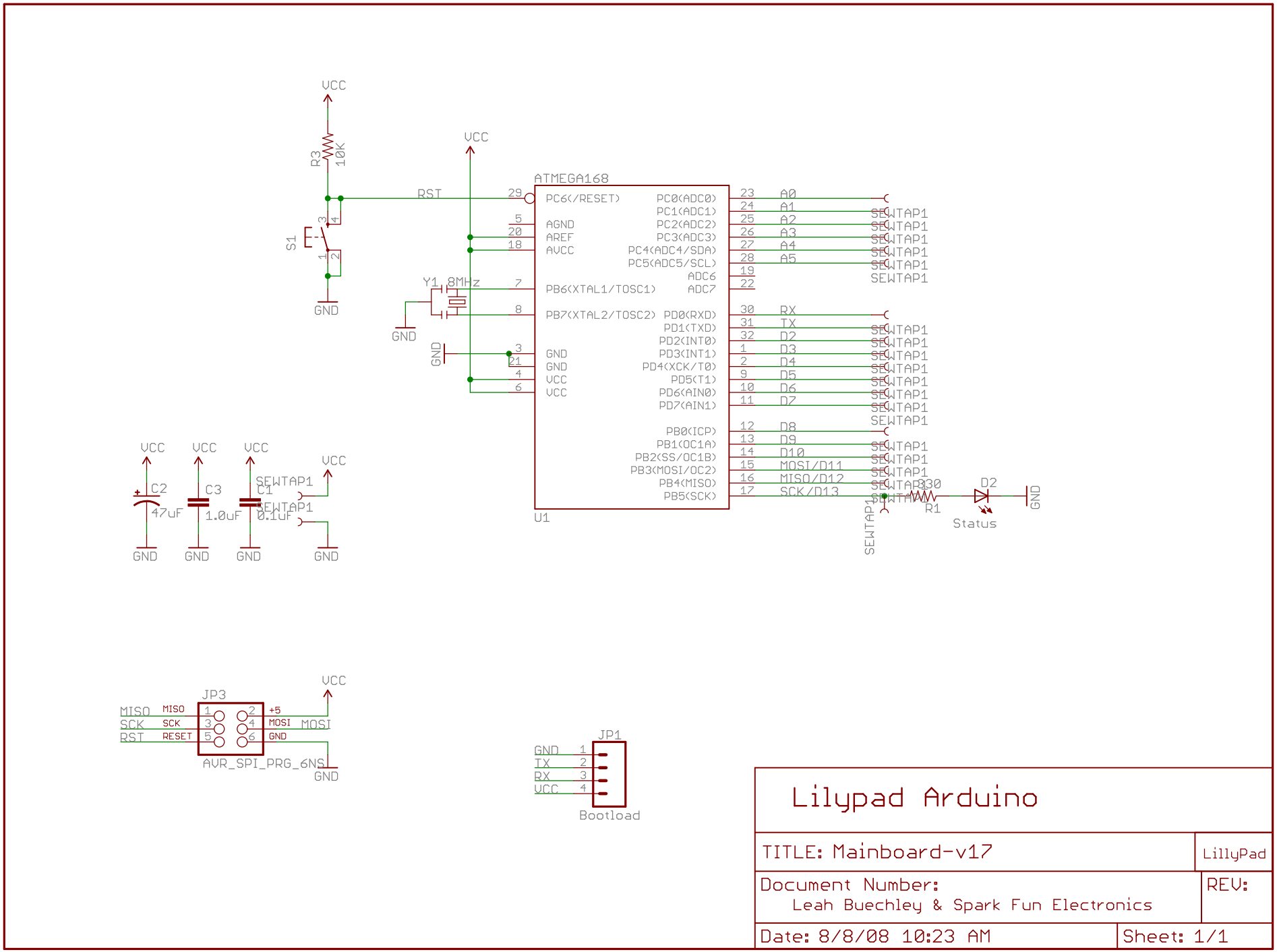

Lilypad Arduino

TITLE: Mainboard-v17	LillyPad
Document Number: Leah Buechley & Spark Fun Electronics	REV:
Date: 8/8/08 10:23 AM	Sheet: 1/1

8/8/08 10:28 AM /Users/Leah/Desktop/LilyPad/Eagle_files/Mainboard-v17/Mainboard-v17.sch (Sheet: 1/1)